VALVESEAL
valves & sealing solutions

Vane-Type Waterflow Indicator Model TF-WFY

Technical Features

- Size: DN50-DN250 / 2"- 10"
- Working Pressure: 450PSI & 300PSI
- Sensitivity:
  FM: 1. No-alarm flow ≤15L/min
  2. Alarm flow ＞15L/min, ≤75L/min
  UL: 1. No-alarm flow ≤15L/min
  2. Alarm flow ＞15L/min, ≤37.5L/min
- Capacity of Switch Contacts:
  AC 125/250V 8A
  DC 24V 3A
  DC 30V 2.5A
- Working Temperature Range: 0~49°C / 32~120.2°F
- Steel Pipe: SCH10-40
- 0-90 Seconds Field Replaceable Retard

Dimensions

Size	Nominal Pipe Size OD.(mm)	L(mm)	H(mm)
2"	60.3	85	188
2.5"	73 / 76.1	92	200
3"	88.9	106	220
4"	114.3	134	245
5"	141.3 / 139.7	162	272
6"	168.3 / 165.1	189.5	298
8"	219.1 / 216.3	240	350
10"	273	293	405

Table 1

Technical Information

- I. Overview
  The vane type water flow switch use in wet pipe systems only. Water flow in the pipe deflects a vane, which produces a switched output usually after a specified delay.
- II. Main Components
  ZSJZ series water flow indicator is mainly composed of the saddle, blade rack, bottom plate, outer cover, Air delay device, micro-switch, junction box, etc.
  1. The main outline drawing is shown in Figure 1 Outline Drawing.
  2. Main dimensions of water flow indicator are shown in Table 1.
  3. Materials of the main components are shown in Table 2.

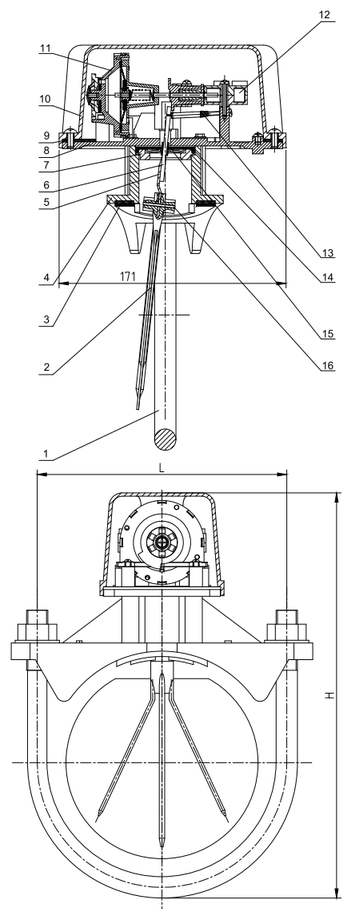

Figure 1 Outline Drawing

Installation

- Installation of water flow indicator:
  at the pre-set installation position, use a tapper to drill on the main pipeline and remove burrs according to the product specification;
  roll up the blade into a small size and put it into the pipeline, install the U-shaped bolt and fasten it up with two fastening nuts, and the specific installation drawing is shown in Figure 2.

Material List

NO.	Name	Qty	Material	Standard
1	U-type bolt	1	ASTM A36	ASTM A36 / A36M
2	Vane	1	LLDPE	
3	Sealing Gastket	1	EPDM	ASTM D2000
4	Framework	1	ASTM A536 65-45-12	ASTM A536
5	Connector	1	S.S.304	ASTM A276
6	Shaft	1	S.S.304	ASTM A276
7	Plastic Bracket	1	POM	
8	Base Plate	1	S.S.304	ASTM A351
9	Dust Proof Gasket	1	EVA	
10	Outer Shell	1	A03600	ASTM B85
11	Decelerator	1		
12	Microswitch	2		
13	Thread Conneeting Spring	1	S.S.304	ASTM A276
14	Sealing	1	S.S.304+EPDM	ASTM A276 / ASTM D2000
15	SS Bracket	1	S.S.304	ASTM A276
16	Hollow Pin	1	S.S.304	ASTM A276

Table 2

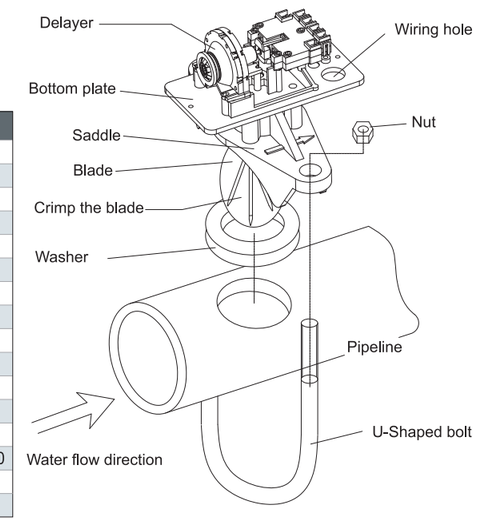

Figure 2 Installation Drawing

Wiring diagram

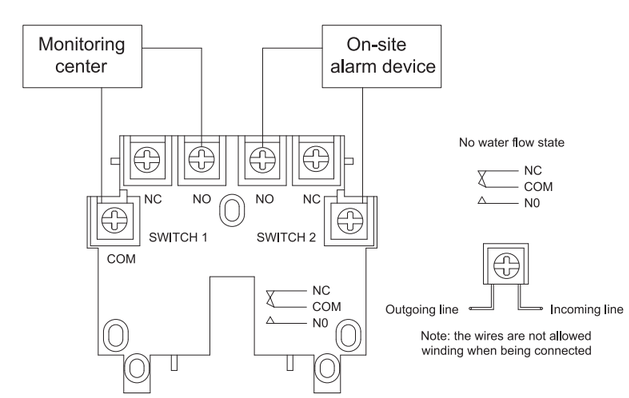

Figure 3

Specification	Hole size
DN50, DN65	32+2mm
DN80-DN250	51+2mm

Table 3

VALVESEAL, S.L. C/ Ronda Maiols, 1 Edificio BMC Pta 3ª Of.328. 08192 Sant Quirze del Vallés (Barcelona) -Spain. Telf./*Phone* +34 937701960 - Email valveseal@valveseal.es
C/ Fuente de la apretura, 23. 28694 Chapineria (Madrid) - Spain. Telf. / *Phone* +34 910133362
www.valveseal.es